ST. LAWRENCE SENIOR SECONDARY SCHOOL SSONDE NAMUGONGO
P.O BOX 304, MUKONO

UGANDA CERTIFICATE OF EDUCATION **(UCE)**
BEGINNING OF TERM I EXAMINATIONS 2026
S.3 MATHEMATICS
Time Allowed: **2 Hours 15 minutes**

STUDENT NAME: .....

STREAM: .....SIGNATURE: .....

DO NOT OPEN THIS BOOKLET UNTIL YOU ARE TOLD TO DO SO BY THE INVIGILATOR

INSTRUCTIONS TO CANDIDATES:

1. Do not write anything in this paper, any rough work should be written in the response booklet(s) provided and crossed out.
2. The time allowed for this paper is strictly **2 Hours and 15 minutes** and no additional time shall be granted.
3. This paper consists of **two** sections; **A** and **B** with a total of 6 examination items
4. Section A has **two COMPULSORY items.**
5. Section B has two parts; Part I and Part II. Attempt two items choosing one item from each part.
6. All in all, a total of **FOUR ITEMS** must be attempted. Any additional item(s) attempted will not be given any scores
7. Where necessary, graph paper is provided and as well feel free to use a non-programmable calculator
8. Begin each item on a fresh page and clearly indicate them in the response booklet provided
9. Tidy handwriting, meaningful mathematical judgement and conclusion may increase your chances of excelling.

FOR SCORER'S USE ONLY

SECTION	A		B				TOTAL
			PART I		PART II		
ITEM	1	2	3	4	5	6	
SCORE							
INITIAL							

SECTION A
Attempt ALL items in this Section

Item 1

Mr. Sumba is a goat farmer in Buikwe district. In January 2023, he had a total of 350 goats on his farm which rose to a total of 420 goats by April the same year.

Due to limited space, he has decided to involve his young brother Gordon and they have started a new farm in Pallisa district of which they have contributed a sum of **"Thirty million shillings"** with Mr. Sumba contributing five times as much as his brother Gordon.

They have purchased 185 goats each costing **"One hundred fifty thousand shillings"** and then used the balance for hiring a helper. After 6 months, they developed a misunderstanding having accumulated to a total of 120 kids and 400 mature goats. They have decided to dissolve the farm selling the kids and goats at 95,000 shillings and 170,000 shillings respectively. They have also agreed that 5% of the money obtained be used for appreciating the helper and the rest be shared in the ratio of their initial contribution.

Task:

a) Calculate the percentage increase in the number of goats in Mr. Sumba's farm from January to April.
b) How much money as given to the helper?
c) Find how much each of them is to get upon dissolving the business

Item 2

Mr. Sigiriya is a well-known farmer in Luweero district. He decided to represent his cattle using x and goats using y. His herdsman consulted him to know how many cattle and goats that are on his farm.

He told him that the number of cattle, x satisfied the equation $\left(\frac{2x+7}{3}\right)+\left(\frac{x+1}{2}\right)=\frac{11(x-6)}{6}$ while the number of goats, y satisfied the equation $3\left(\frac{12y-5}{5}\right)-\frac{2}{15}(8y-35)=63$ and the herdsman had to solve both equations to obtain the number of cattle and goats in the farm.

Mr. Sigiriya as well owns a rectangular piece of land whose width is 1 kilometre shorter than the length and having a total area of 6 square kilometres.

He also has an isosceles triangular dining table at home. The equal sides of the triangle are x meters each while the total base is $(2x-2)$ meters and the vertical height of the triangular surface is 2 meters. He is interested in knowing the length of the base and the other equal sides of the triangular dining table.

Task:

a) How many cattle and goats does Mr. Sigiriya have?
b) Determine the dimensions of Mr. Sigiriya's;
   (i) Rectangular piece of land
   (ii) Triangular dining table

SECTION B
PART I
Attempt only one item in this part

Item 3

Three schools want to participate in the National Schools Football Sports Galla to be held at Bukedea Comprehensive School playground. Unfortunately, none of the schools has a school bus and they want to hire a bus for the one day for the activity. The bus charges UGX. 15,000 per km moved. The three schools through their sports teachers agreed to share the cost of the bus equally amongst themselves. On the sports day, they hired a bus from a certain school and they set off at **5:45 am** from Mukono. The bus increased the speed gradually to **90km/hr** reaching Jinja at **6:45am**. From there, the bus driver maintained this same speed for $\mathbf{1\frac{1}{4}}$ hours reaching Mbale. From Mbale, he reduced slowly in speed reaching Bukedea Comprehensive School at $\mathbf{9{:}30am.}$
The games started at 10:00 am and each team played six games.
School A won **3** games, drew **2** games and lost **1** game.
School B won **4** games and lost **2** games.
School C won **2** games and drew **4** games.
The organizers award three points for a win, one point for a draw and no point for a lose. They declared these schools as the first three schools in order of their points from the games. They were to receive a total cash prize of UGX. 16,500,000 but they are struggling to determine how much each should take with clear mathematical reasoning.

Task

a) Find how much each school paid for the bus
b) Decide the cash prize for each school.

Item 4

Brian' average Mark in a test in 3 subjects was 75%. When the marks of the 4th subject were added, his average mark went to 77.5% yet he does not know what he could have scored in the 4th subject.
During the BOT examinations, Brian scored 55, 45, 66, 66, 76, 82, 90, 35, 45 and 66 in all the ten subjects he sat for and his dad being a statistician wanted Brian to explain his performance using range, average, mode and median.
When he was sent to the store, he recorded his purchases for the day in the table below;

COMMODITY	TOTAL PURCHASES (KG)
Maize	800
Simsim	900
Soya beans	500
Sorghum	750
Cassava	650

His father wants him to represent the sales on a pie-chart for him to interpret easily. Since his father is old, he wants the pie-chart to be strictly of radius of **6cm** so that he can see well.

Task:

Help Brian to;

a) Determine his score in the 4th subject in the test
b) Explain his BOT scores using the stated measures of dispersion and central tendency.
c) Represent his purchases on a pie-chart that his father can see well to interpret the purchases

PART II
Attempt only one item in this part

Item 5

Richard is a carpenter who mainly deals in home furniture. A customer has contacted him and needs two types of wood which must all be circular but with different dimensions such that the bigger one has a radius of 56cm and the smaller one has a radius of 42cm. In his shop, he has two pieces of wood which he will cut as shown below.

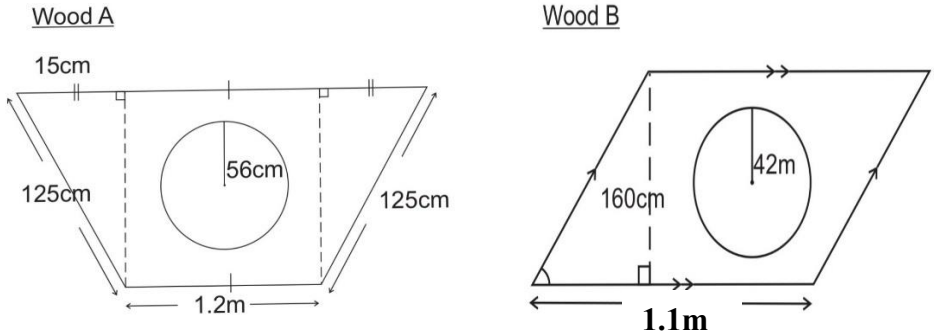

Wood B has a base of 1.1m and a vertical height of 160cm

He has planned to cut out the bigger circular wood from wood A and the smaller from wood B. After cutting the wood, each remaining piece will be painted using brown paint. A litre of brown paint costs shs. 5,000 and can paint an area of $0.15m^2$. Richard doesn't know the total cost of paint he will need.

Task

Help Richard to determine the total cost of paint he will need.

(Clearly show your working with all necessary steps, Take $\pi = \frac{22}{7}$)

Item 6

Mr. Okello is a well-known farmer in Kanungu district. He has a triangular piece of land whose vertices are $A(1,2), B(3,2), C(3,4)$ which are units in Kilometres. When his uncle in Botswana requested him to send the dimensions of the land, he decided to represent these on a graph paper. unfortunately, due to his uncle's old age, he requested that the vertices of the triangle be enlarged using a scale factor +2 about the origin.

Since Mr. Okello also deals in apiculture, he usually collects honey and packages them for sale in cylindrical containers of diameter 11.2cm and height of 10cm by filling them up to the brim. Last week, he collected honey that can occupy a total space of $147{,}840cm^3$. He wants to purchase an exact number of containers to package the honey but does not know how many they should be and their total cost since each of the containers is sold at shs. 750 only.

Task:

Help Mr. Okello to determine;

a) The vertices of the triangular piece of land after the enlargement using scale factor +2 about the origin.
b) The exact number of containers to purchase and their total cost so that he can package the honey for sale (Clearly show your working with all necessary steps, Take $\pi = \frac{22}{7}$)

******THE END******

"Good Things Come to Those Who Strive Harder for them, Never Give Up!!!" @OSRO